Sunny

Aurora

SAUNA LOUNGER - 069 AT/ B

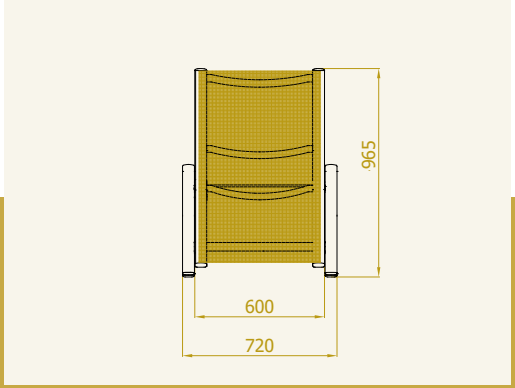

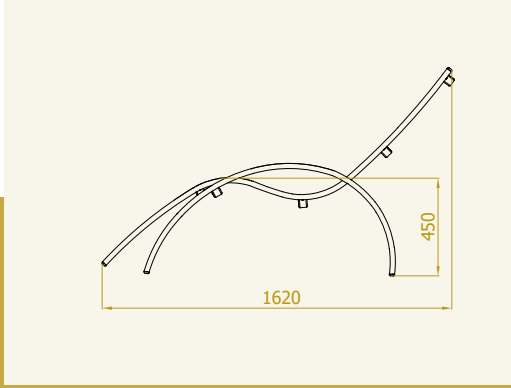

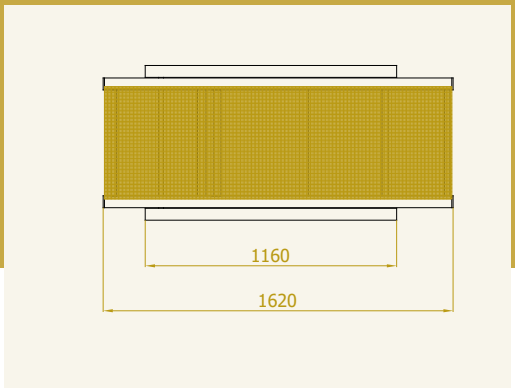

The sauna relax chair AURORA is ergonomically formed and ensures an extremely good rest. The very stable shell of the high quality lounger enables you safe and very easy descending on three sides of the chair.
You can choose between fix chair and one with reclining (gas spring) mechanism.

Aurora

SAUNA LOUNGER - 069 AT/ A

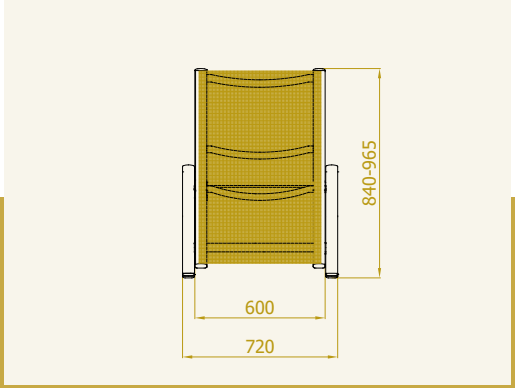

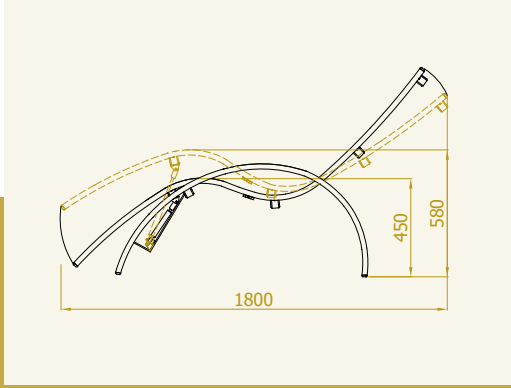

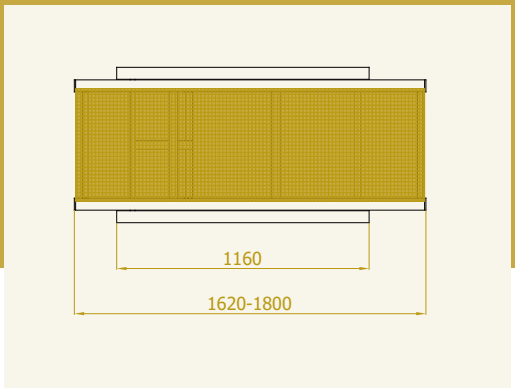

The sauna relax chair / recliner AURORA is ergonomically formed and ensures an extremely good rest. The very stable shell of the high quality lounger enables you safe and very easy descending on three sides of the chair.
You can choose between fix chair and one with reclining (gas spring) mechanism.

Suny

MEDITATION CHAIR - 108 AT

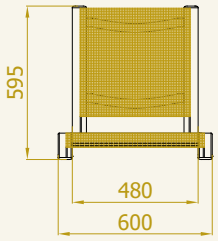

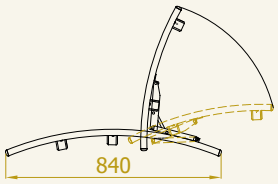

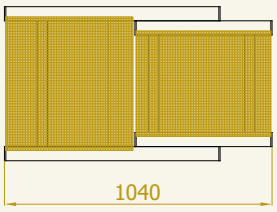

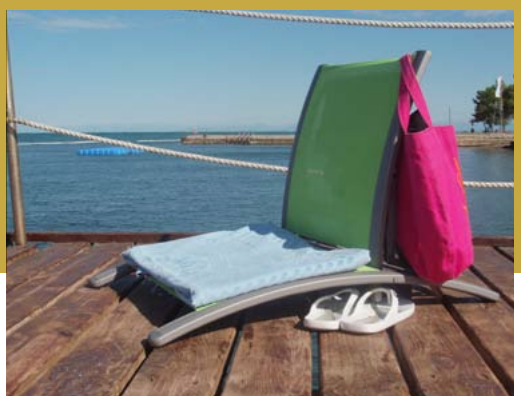

The meditation chair SUNY is a market innovation.
The adjustable and foldable chair can accompany you to picnics and trips and ensure that you always sit or lie comfortably.
It can also be used as a childrens deck chair or mini deck chair at the beach.

Suny

Pocket Star

SUN LOUNGER - 096 AT

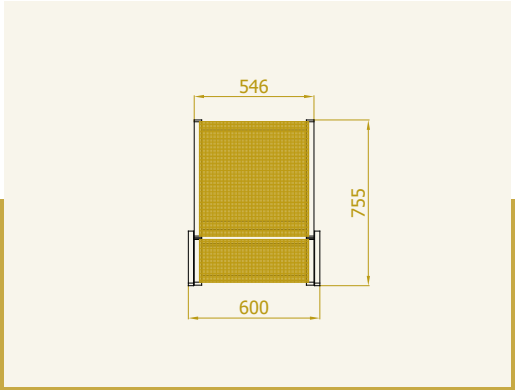

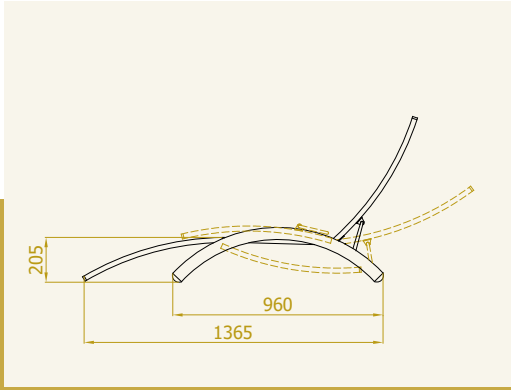

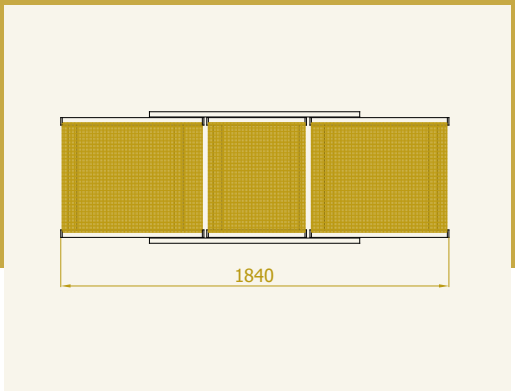

POCKET STAR
is adjustable (4 levels), foldable and portable lounger made for relaxing in nature, or sunbathing on some hidden corner of the beach. The lounger can easy change into a relaxing chair.
Optional equipment: a foldable sunshade and/or a special POCKET STAR bag.

Sky

FOLDING CHAIR - 006 AT

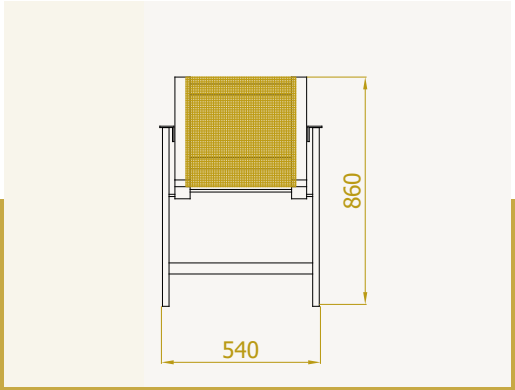

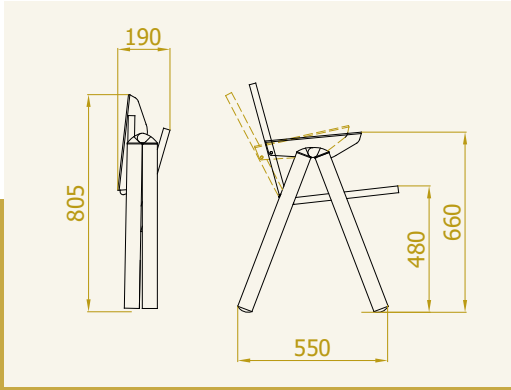

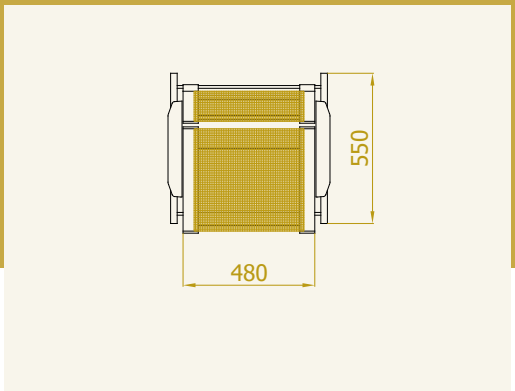

The small recliner chair SKY is very comfortable chair.
The adjustable (2 steps) and foldable chair ist the best choise for areas where there isn't sufficient space for highback recliner chairs. It is ideal for furnishing small balconies, waitingrooms and can be also used for interier.

Stella

TABLE - 080t-AC

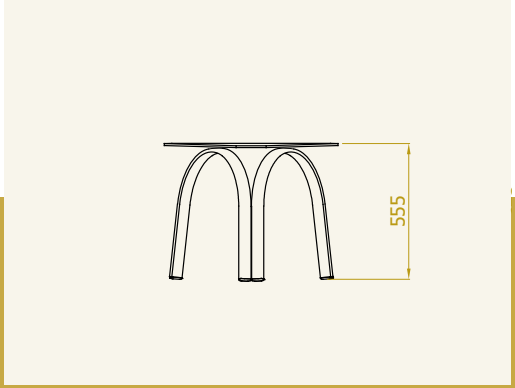

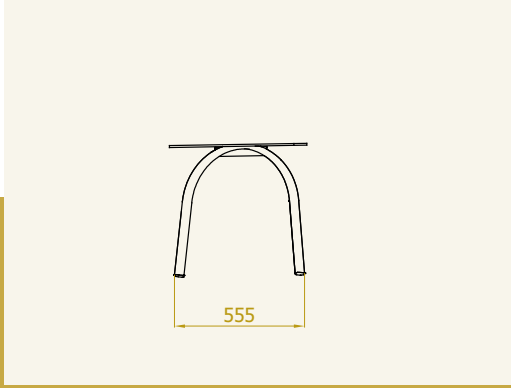

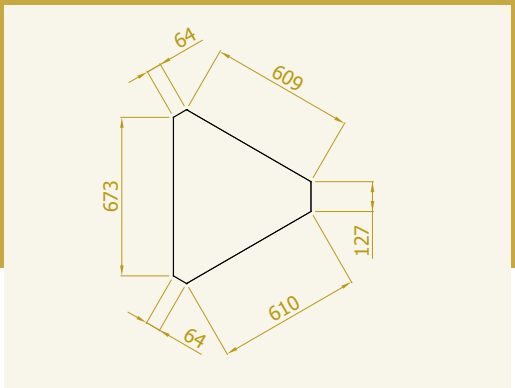

The table STELLA is small table tringular form.
It is ideal for furnishing small balconies, waitingrooms and can be also used for interier.

Aurora

DINING CHAIR - 015 AT

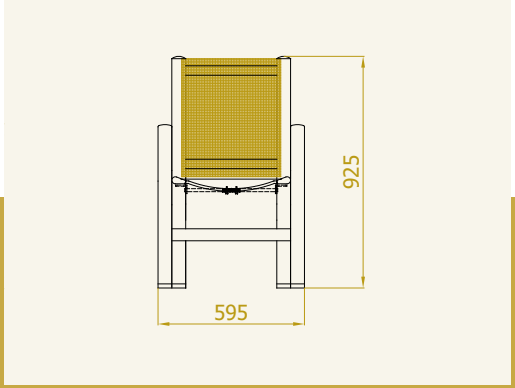

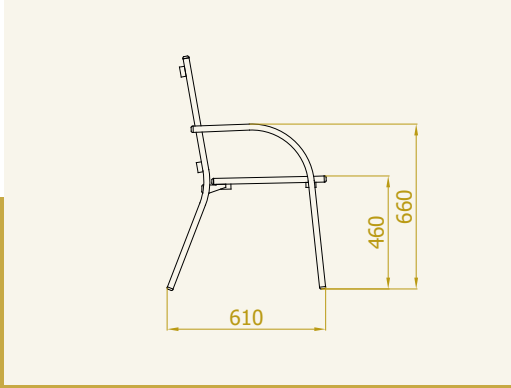

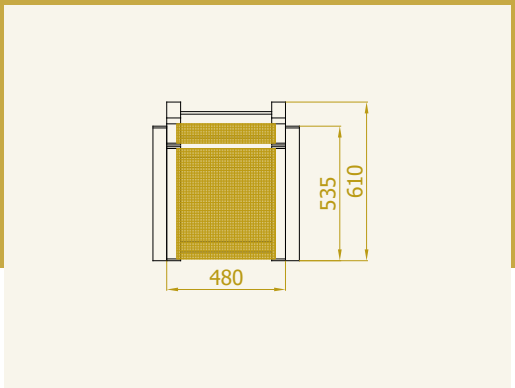

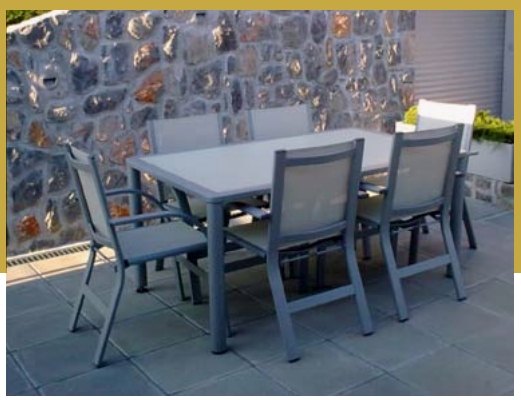

The terrace dining chair AURORA is designed in a minimalistic style.
Thanks to the special RF mechanism, this terrace chair is extremely endurable. You can lean on it or sit in it with your full weight without the danger of breaking the chair.

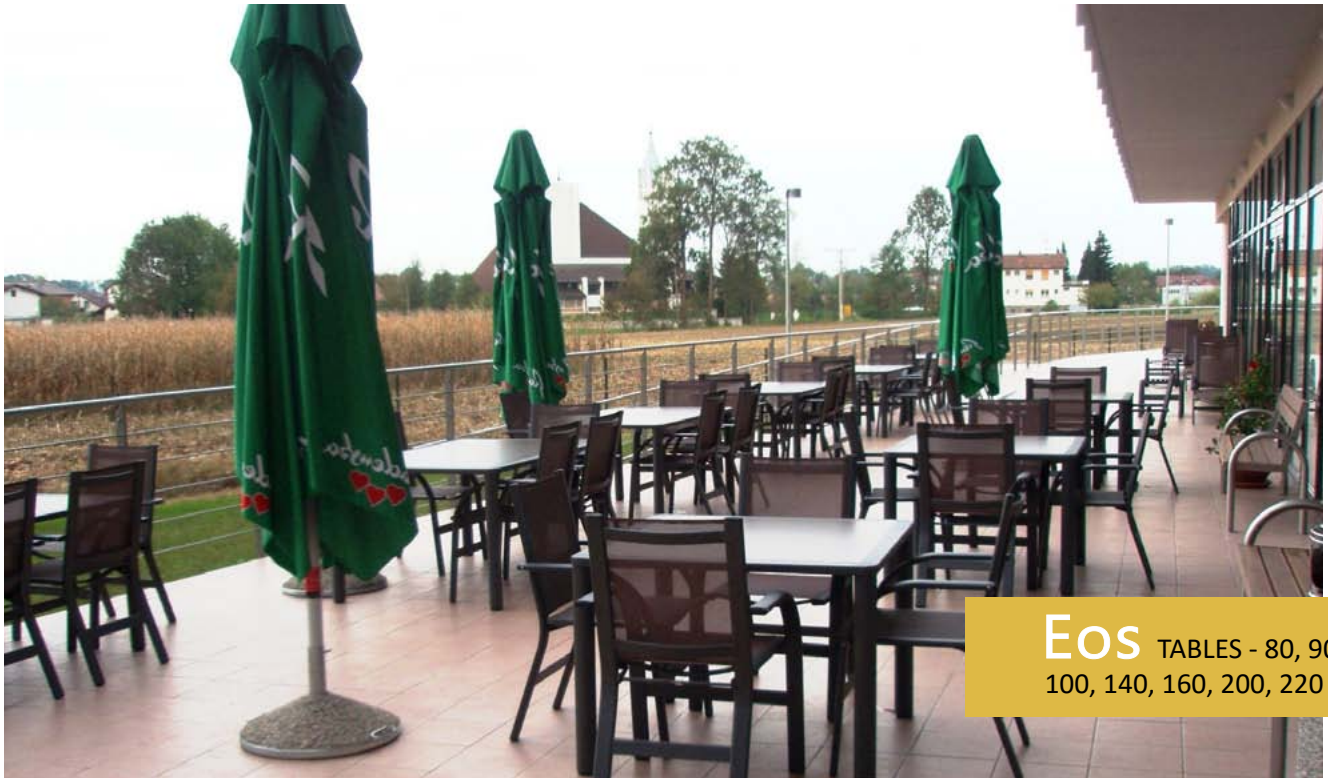

Eos TABLES - 80, 90, 100, 140, 160, 200, 220 cm

The table EOS very strong table with different insert plates:

- exterier decoration compact plate d=10 mm
- security glass d=6 mm
- or made out of aluminium slats

Fixed underconstruction; dismanting, adjustible table legs.
Table dimensions: from 80 to 220 cm - after inquiery.

Apolon

DINING CHAIR - 055 AT

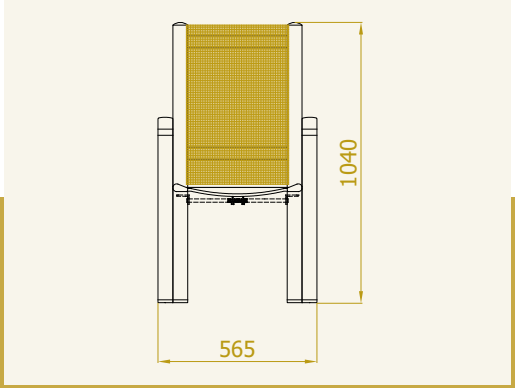

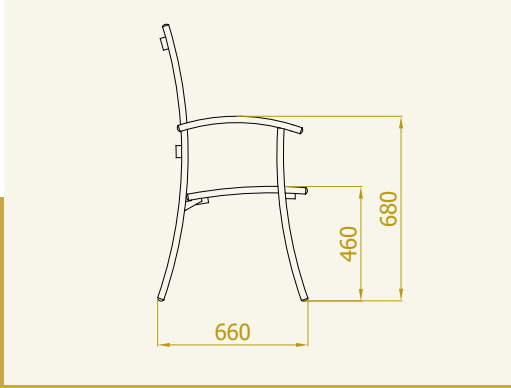

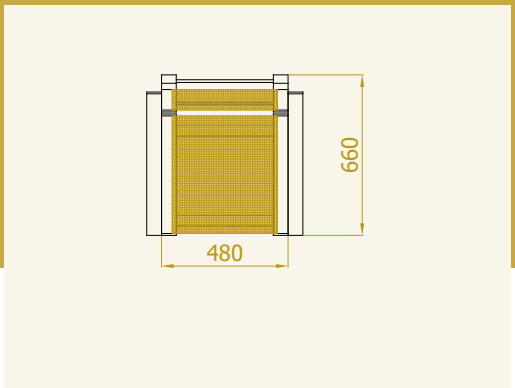

The dining chair APOLON was developed for special, royal atmospheres.
The chair is very elegant, a bit higher and all its parts are curved.
The position and the curves of the back part make you sit straight, even if you do not want or do not intend to sit that way.

Spektra

TABLES - 85, 120, 160, 200-AC

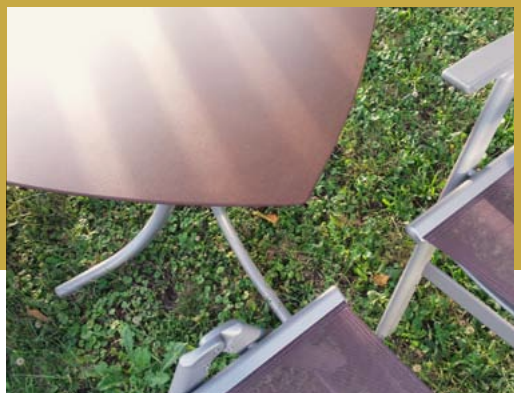

The table SPECTRA with curved angular lines.
Table plate is exterier decoration compact plate d=10 mm and fix underconstruction; adjustible table legs.
Table dimensions between 85 and 200 cm.

Vega

HIGH BACK CHAIR - 050 AT

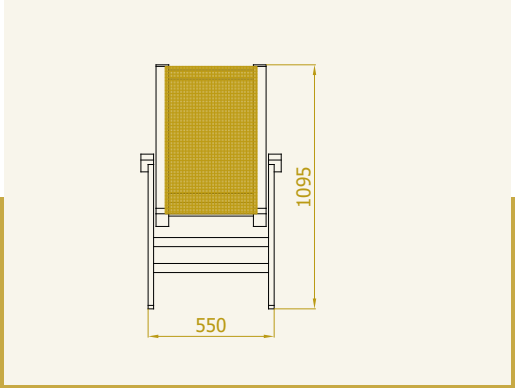

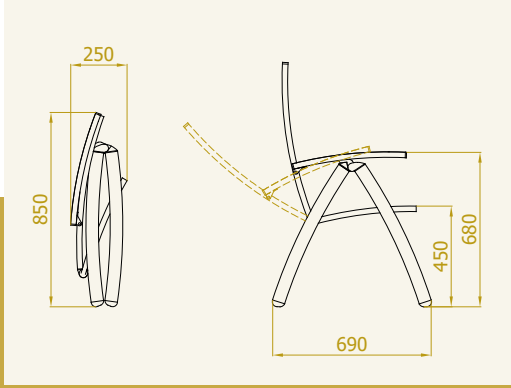

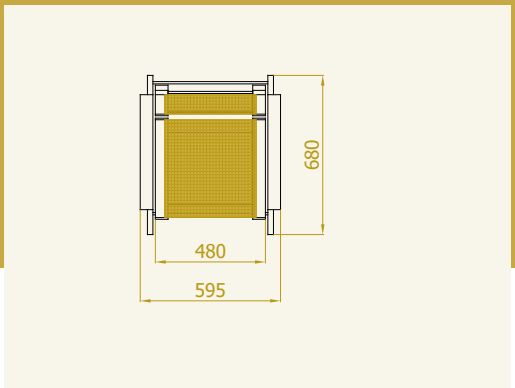

The recliner chair VEGA is very comfortable garden chair. The adjustable (7 steps) and foldable chair ist the best choise for home garden garniture set - just to relax or gethering around the table with friends and family under the sunny sky.

Apolon

SUN LOUNGER - 045 AT/ B

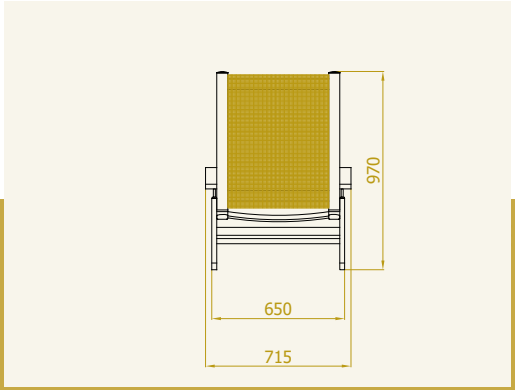

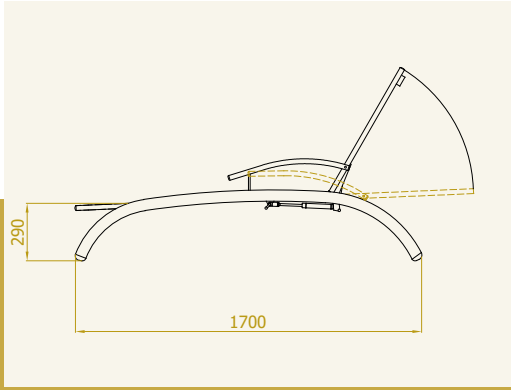

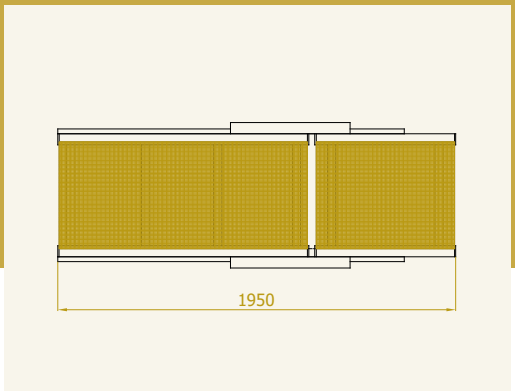

The wellness lounger APOLON ensures a comfortable rest and a cosy sunbathing.
Choose between different editions of this deck chair: without armrests, with manual or gas spring reclining of the backtrest,...
Lounger can be upgraded with tabouret AURORA and the service plate PONTO like small table beside the lounger.

Apolon

SUN LOUNGER - 045 AT/ F

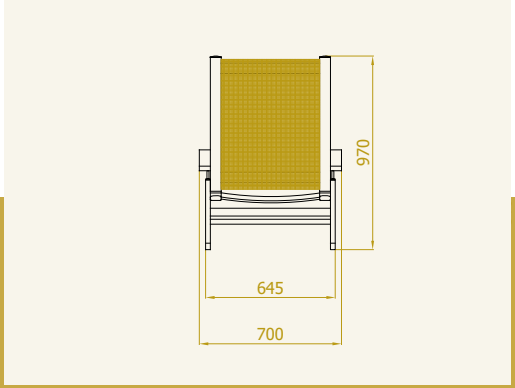

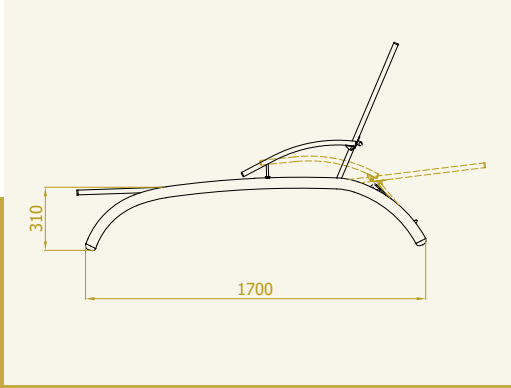

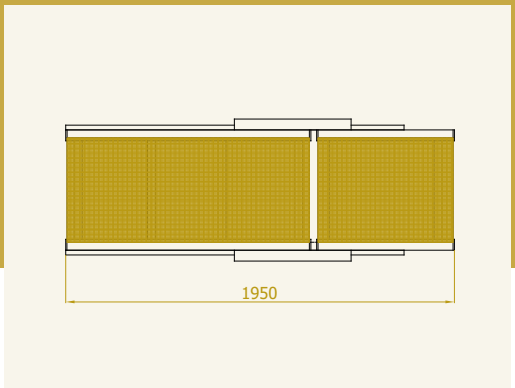

The wellness lounger APOLON ensures a comfortable rest and a cosy sunbathing.
Choose between different editions of this deck chair: without armrests, with manual or gas spring reclining of the backtrest,...
Lounger can be upgraded with tabouret AURORA and the service plate PONTO like small table beside the lounger.

Aurora

STOOL - 035 AT

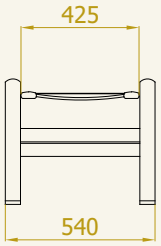

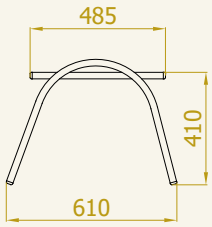

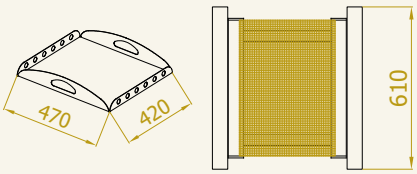

PONTO
Model 180 AL

The tabouret AURORA can be upgraded with **the service plate PONTO** and used like small table beside the lounger or used as an extra seat.
Also can be used as a tabouret beside the chair.

Prometei

SERVICE CART - 100-AL

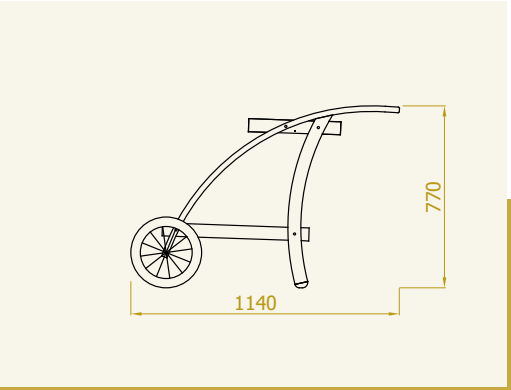

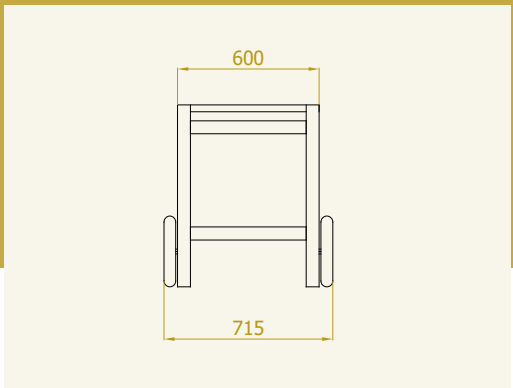

The service cart PROMETEI is elegantly formed.
It has two shelves and a bottle holder.
It is very useful as an additional surface next to a table, grill, or as an extra piece of wellness furniture next to a lounger.

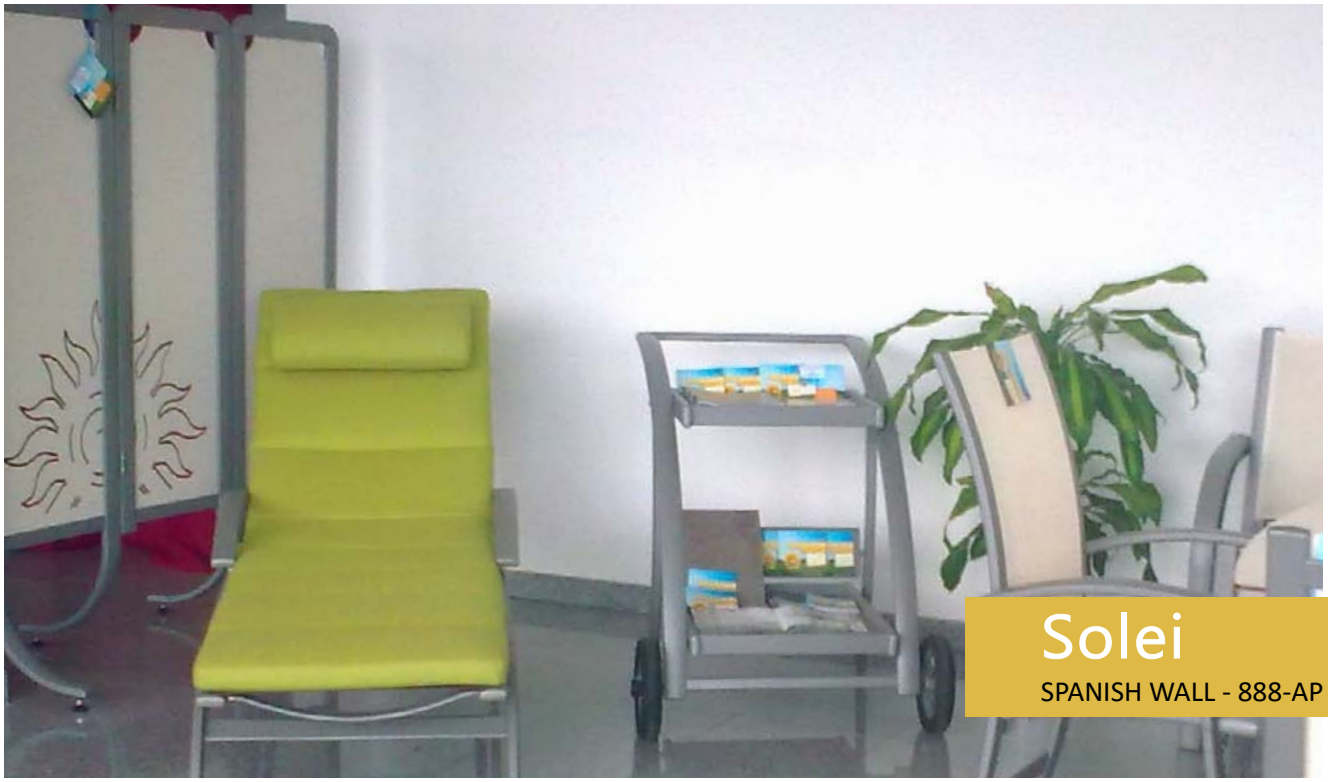

Solei

SPANISH WALL - 888-AP

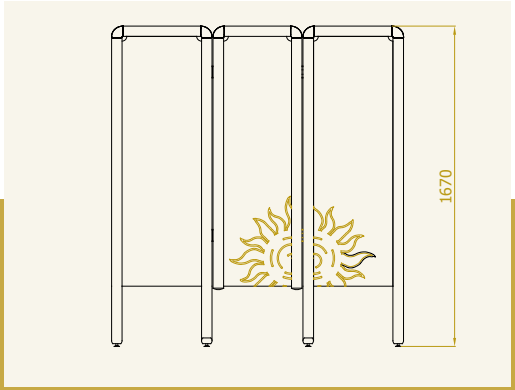

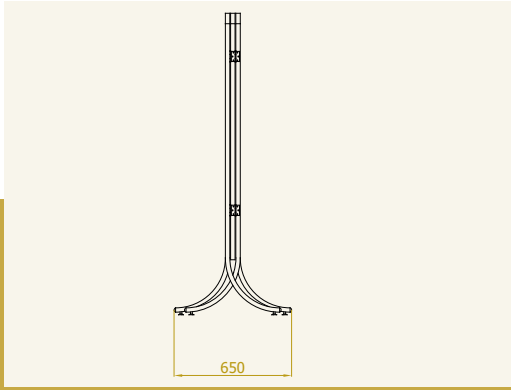

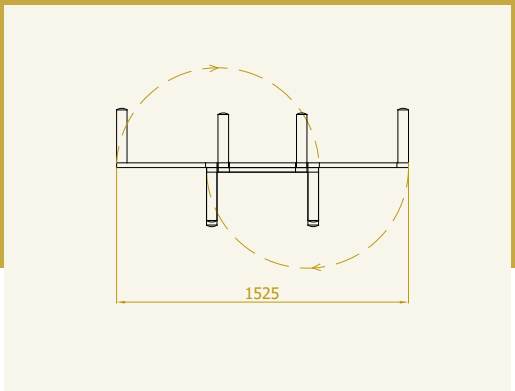

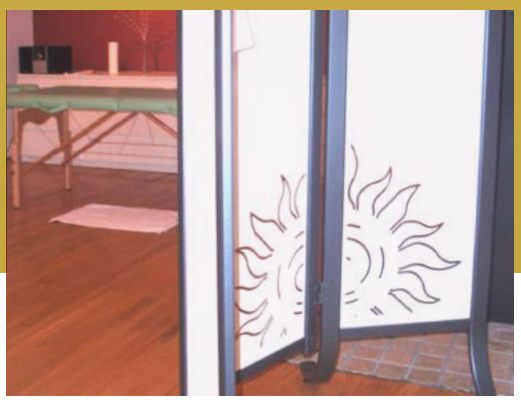

The spanish wall SOLEI...
Outdoor or indoor movable dividing wall is best for hiding from the nearby curious eyes when we want to have a little more privacy.

Suny

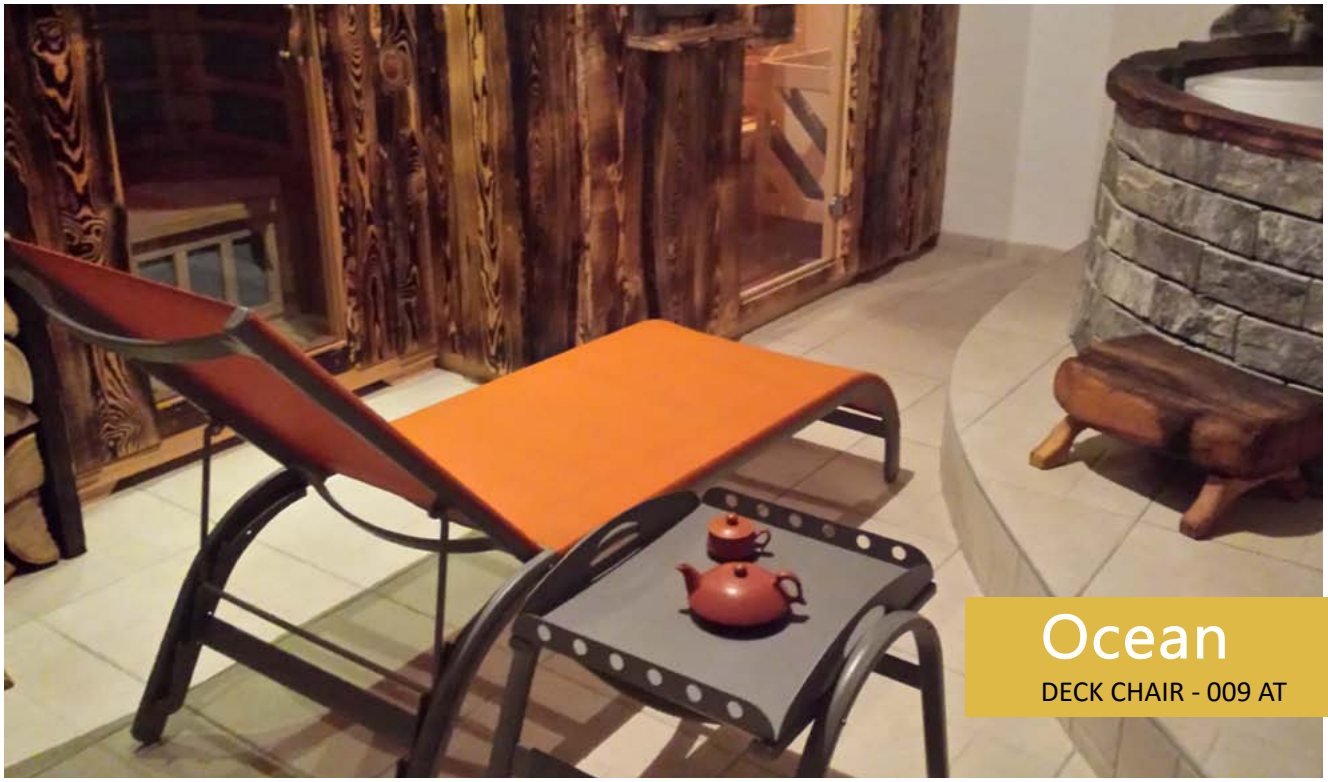

Ocean

DECK CHAIR - 009 AT

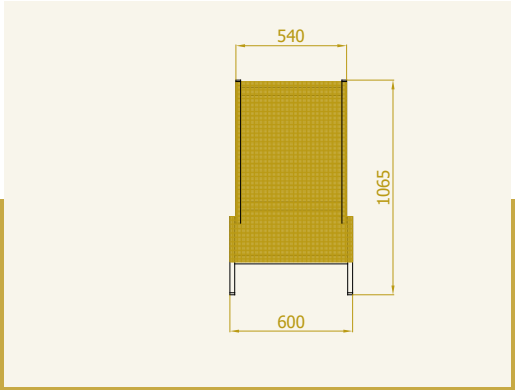

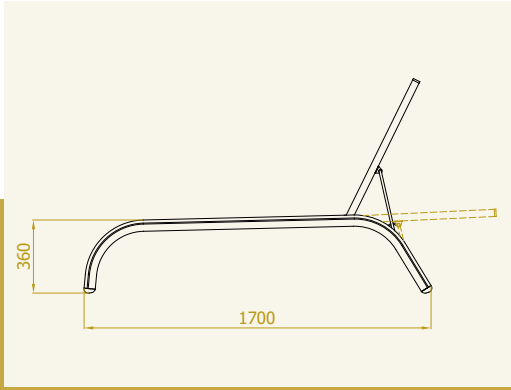

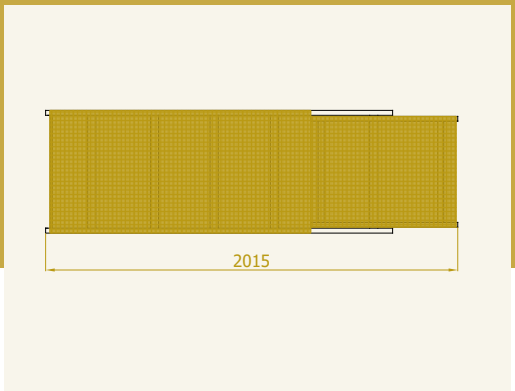

The sun lounger STAR is ideal for furnishing hotels, public beaches, saunas and private or public swimming pools.
Choose between fix (STARLET) or adjustable edition (STAR) of the lounger. Both loungers also allows cosy sunbathing by lying on the abdomen. They are stackable and can be upgraded with a foldable sunshade.

Star

STOOL- 030 AT

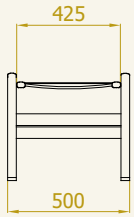

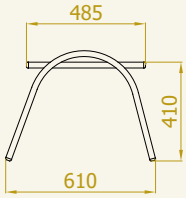

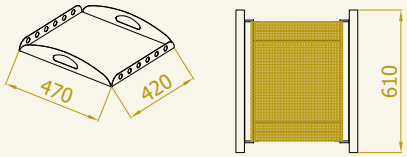

PONTO
Model 180 AL

The tabouret STAR can be upgraded with **the service plate PONTO** and used like small table beside the lounger OCEAN, STAR, STARLET, ... or used as an extra seat.
Also can be used as a tabouret beside the chair.

Suny

Luna

TERRACE CHAIR - 012 AT

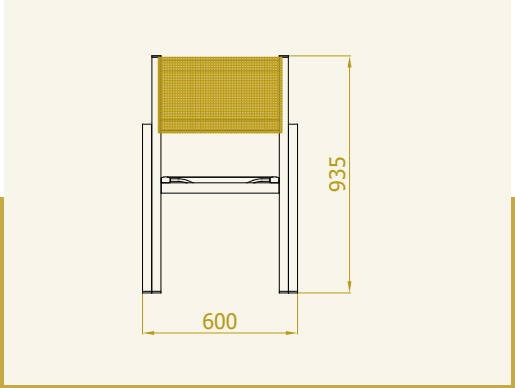

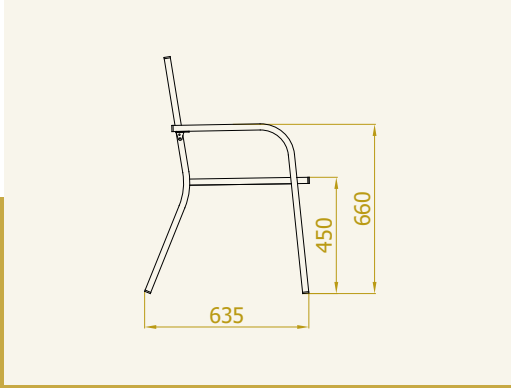

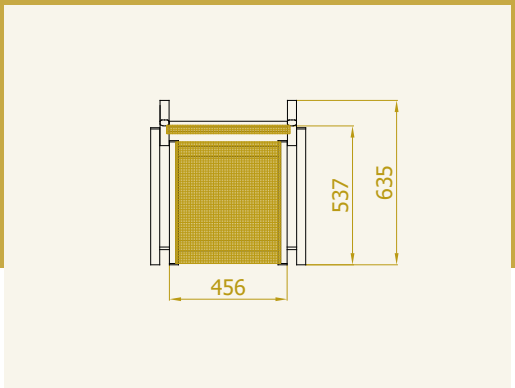

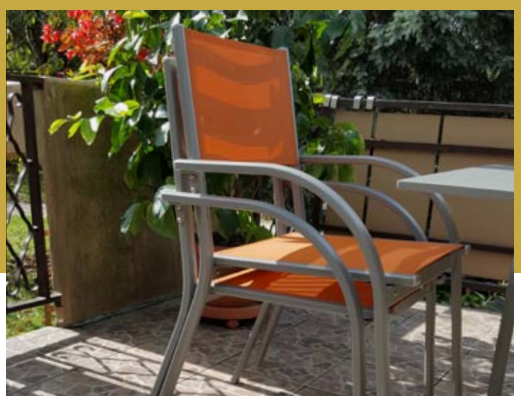

The dining chair LUNA is designed in a minimalistic style. Thanks to the special RF mechanism, this terrace chair is extremely endurable. Best choise for equipping public cafes, bars, terraces and other catering areas. It is also ideal for furnishing small balconies. You can choose between diferent modifications of this chair - with slats (LUN), meshes or combination of both (LUNA).

Luna-s

TERRACE CHAIR - 012 ATL

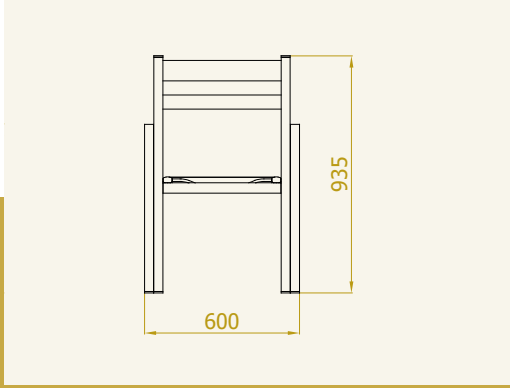

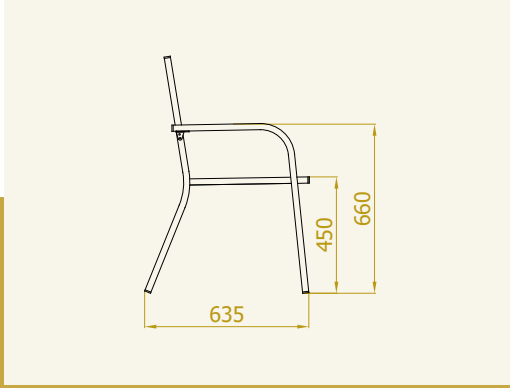

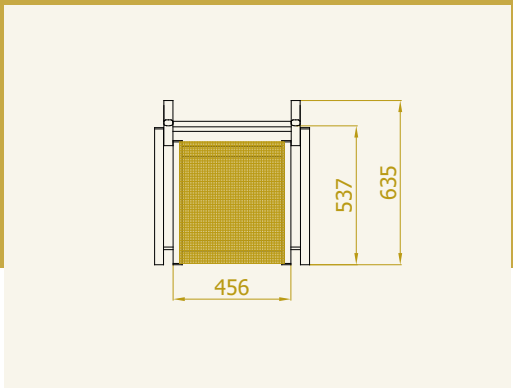

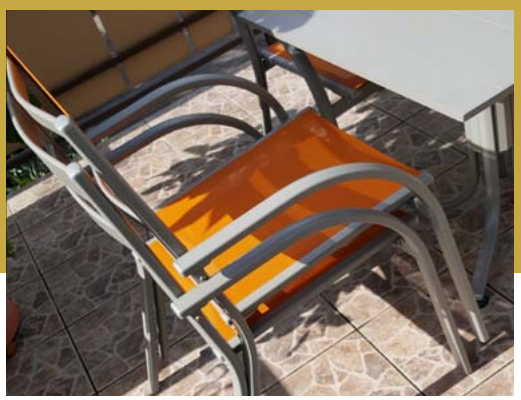

The dining chair LUNA is designed in a minimalistic style. Thanks to the special RF mechanism, this terrace chair is extremely endurable. Best choise for equipping public cafes, bars, terraces and other catering areas. It is also ideal for furnishing small balconies. You can choose between diferent modifications of this chair - with slats (LUN), meshes or combination of both (LUNA).

Lun

TERRACE CHAIR - 012 AL

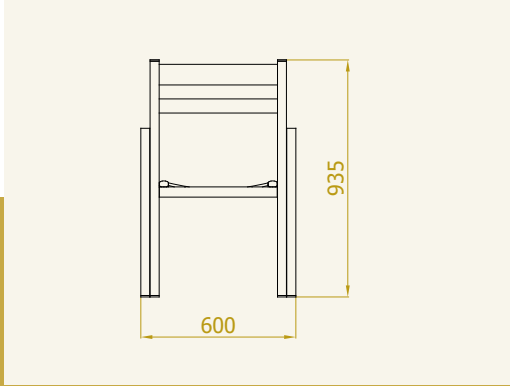

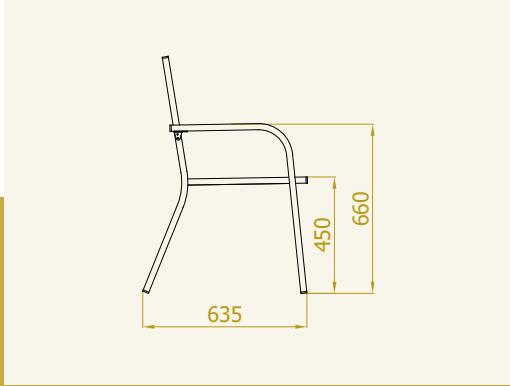

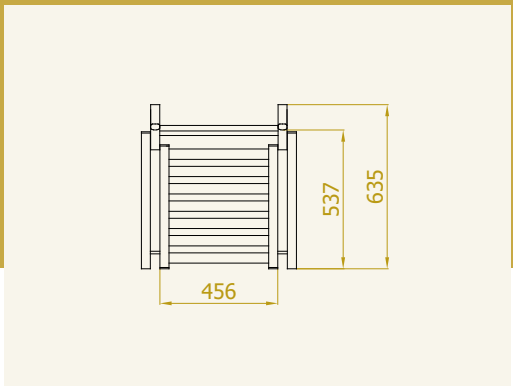

The dining chair LUN is designed in a minimalistic style. Thanks to the special RF mechanism, this terrace chair is extremely endurable. Best choise for equipping public cafes, bars, terraces and other catering areas. It is also ideal for furnishing small balconies. You can choose between diferent modifications of this chair - with slats (LUN), meshes or combination of both (LUNA).

Orion

TERRACE CHAIR - 013 AT

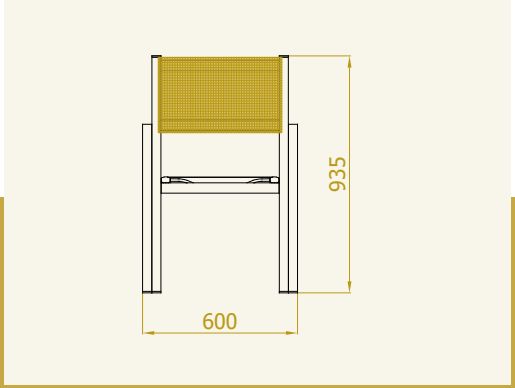

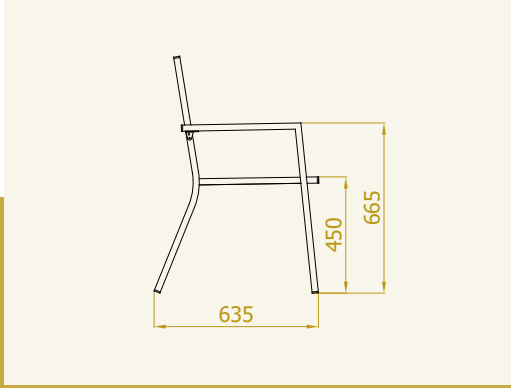

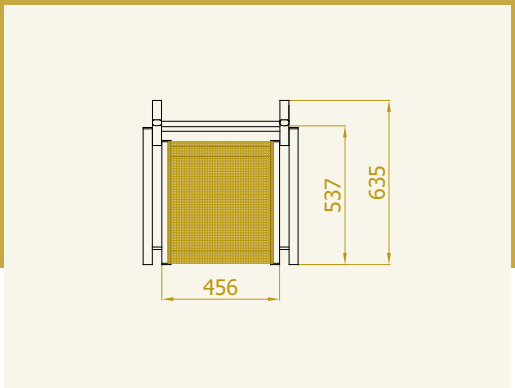

The dining chair ORION is designed in a minimalistic style. Thanks to the special RF mechanism, this terrace chair is extremely endurable. Best choise for equipping public cafes, bars, terraces and other catering areas. It is also ideal for furnishing small balconies. You can choose between diferent modifications of this chair - with slats (ORIO), meshes or combination of both (ORION).

Orion-s

TERRACE CHAIR - 013 ATL

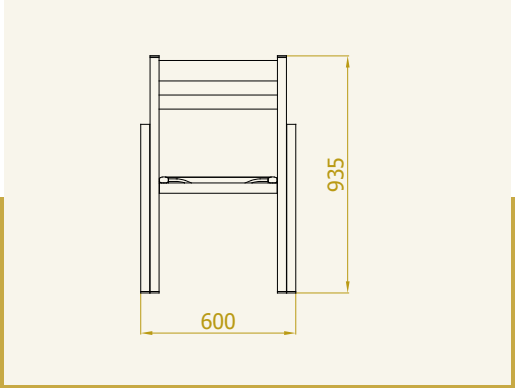

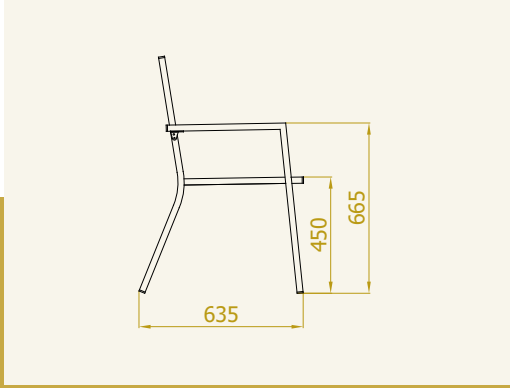

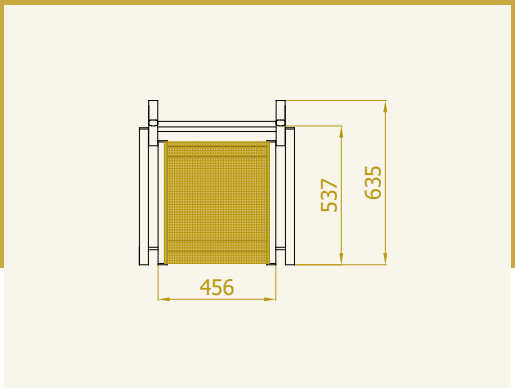

The dining chair ORION is designed in a minimalistic style. Thanks to the special RF mechanism, this terrace chair is extremely endurable. Best choise for equipping public cafes, bars, terraces and other catering areas. It is also ideal for furnishing small balconies. You can choose between diferent modifications of this chair - with slats (ORIO), meshes or combination of both (ORION).

Orio

TERRACE CHAIR - 013 AL

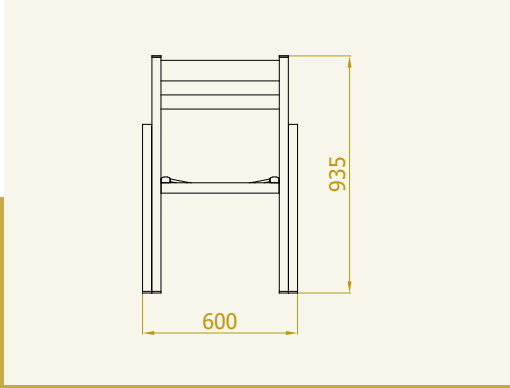

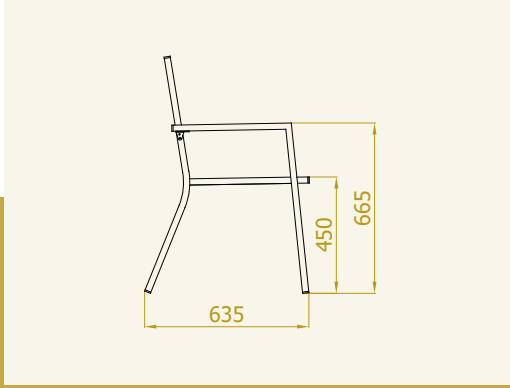

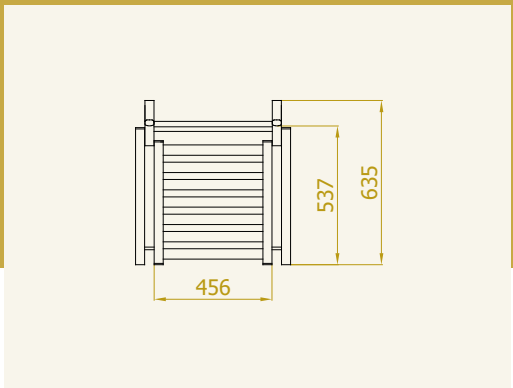

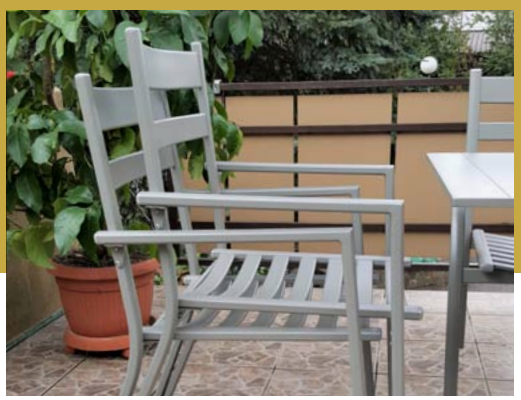

The dining chair ORIO is designed in a minimalistic style. Thanks to the special RF mechanism, this terrace chair is extremely endurable. Best choise for equipping public cafes, bars, terraces and other catering areas. It is also ideal for furnishing small balconies. You can choose between diferent modifications of this chair - with slats (ORIO), meshes or combination of both (ORION).

Catering

TABLES - 70, 75, 80, 85 cm

The catering tables SPEKTRA, ODINA, OZIRIS tables with different plates:

- exterier decoration compact plate 85 x 85 cm
- exterier decoration compact plate or aluminium panels inserted into aluminium frame 70 x 70 cm or 80 x 80 cm
- aluminium plate round fi 75 cm or square table

Starlet

SUN LOUNGER - 090 AT

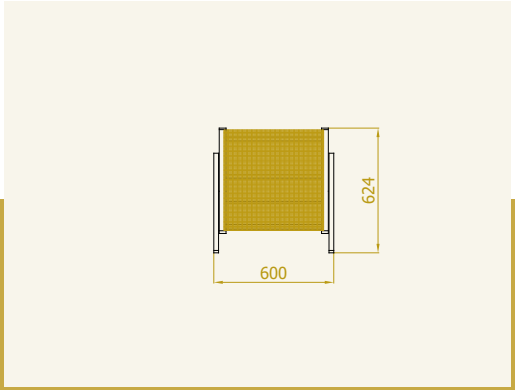

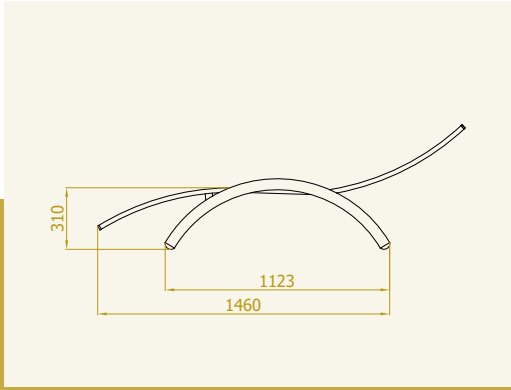

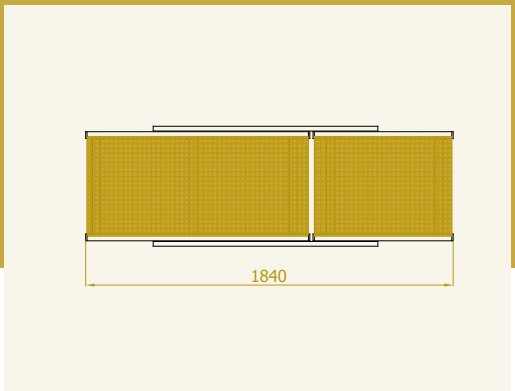

The sun lounger STARLET is ideal for furnishing hotels, public beaches, saunas and private or public swimming pools.
Choose between fix (STARLET) or adjustable edition (STAR) of the lounger. Both loungers also allows cosy sunbathing by lying on the abdomen. They are stackable and can be upgraded with a foldable sunshade.

Star

DECK CHAIR - 093 AT

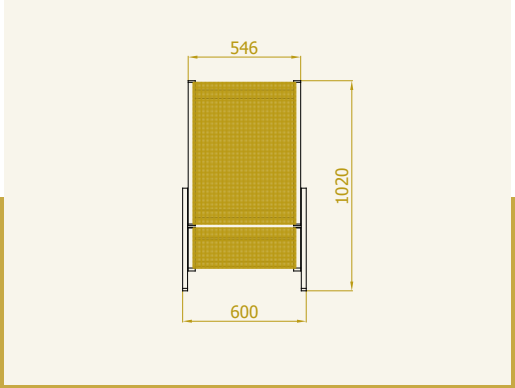

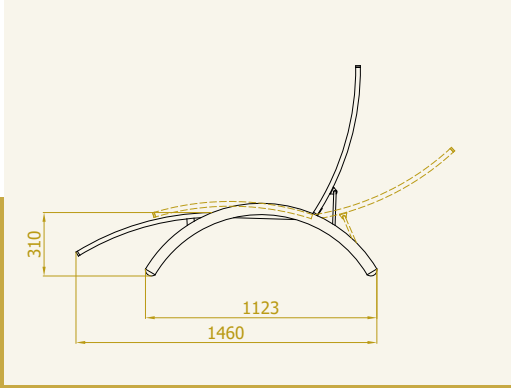

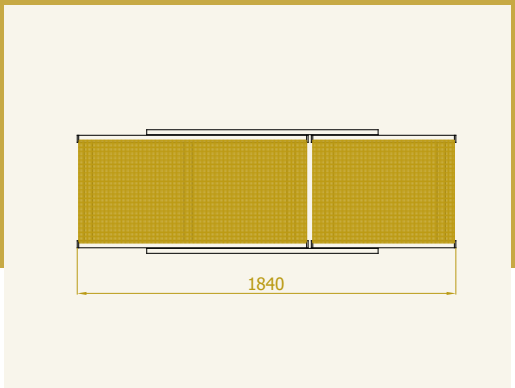

The sun lounger STAR is ideal for furnishing hotels, public beaches, saunas and private or public swimming pools.
Choose between fix (STARLET) or adjustable edition (STAR) of the lounger. Both loungers also allows cosy sunbathing by lying on the abdomen. They are stackable and can be upgraded with a foldable sunshade.

Aura-s

CLUB CHAIR - 003 ATL

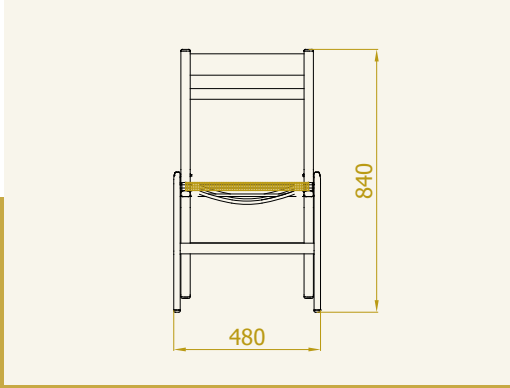

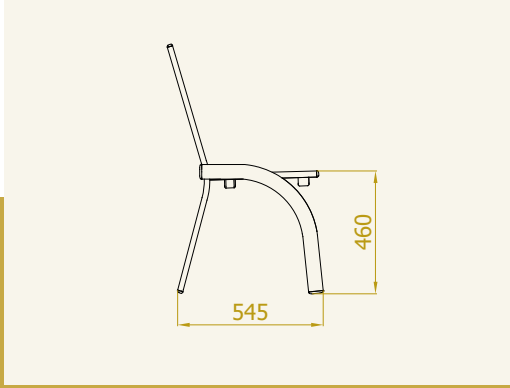

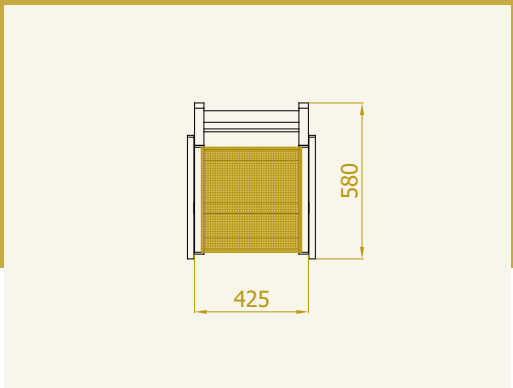

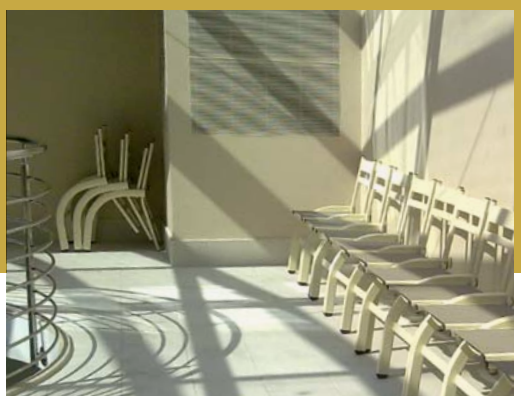

The club chair AURA is designed in futuristic style for equipping public cafes, bars, terraces and other catering areas where there isn't sufficient space for more comfortable chairs. It is also ideal for furnishing small balconies.
You can choose between diferent modifications of this chair - with slats (ORBI) or combination of both (AURA).

Aura

CLUB CHAIR - 003 AT

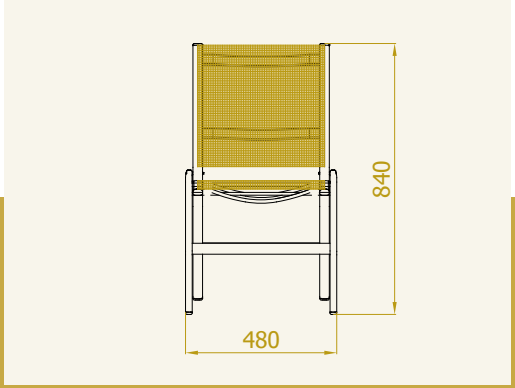

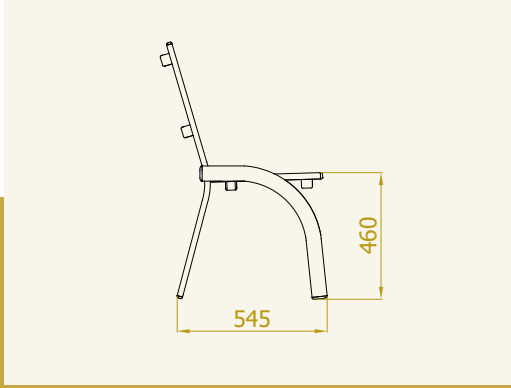

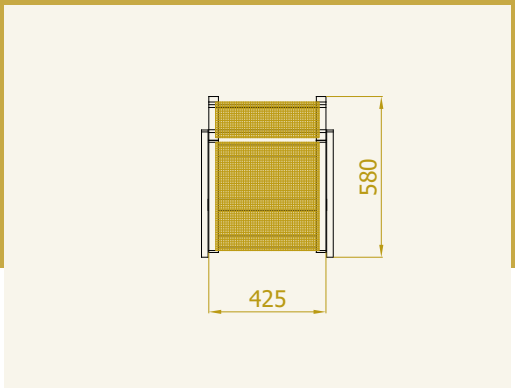

The club chair AURA is designed in futuristic style for equipping public cafes, bars, terraces and other catering areas where there isn't sufficient space for more comfortable chairs. It is also ideal for furnishing small balconies.
You can choose between diferent modifications of this chair - with slats (ORBI) or combination of both (AURA).

Orbi

CLUB CHAIR - 003 AL

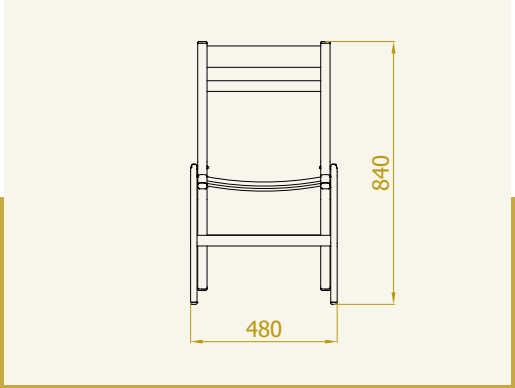

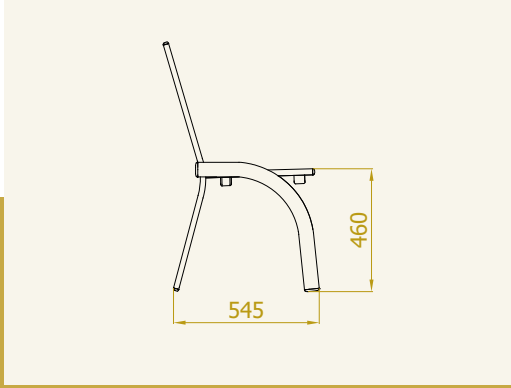

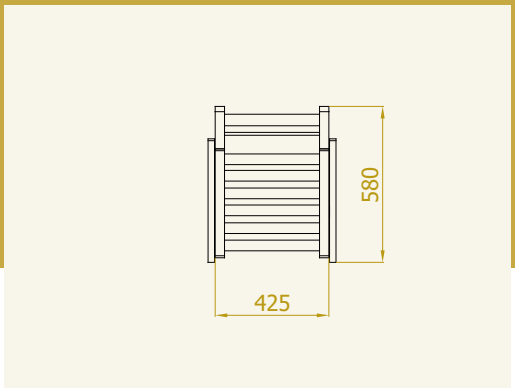

The club chair ORBI is designed in futuristic style for equipping public cafes, bars, terraces and other catering areas where there isn't sufficient space for more comfortable chairs. It is also ideal for furnishing small balconies.
You can choose between diferent modifications of this chair - with slats (ORBI) or combination of both (AURA).

Orbita

TERRACE CHAIR - 015 AL

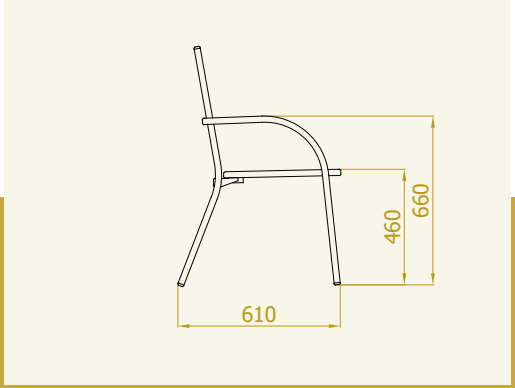

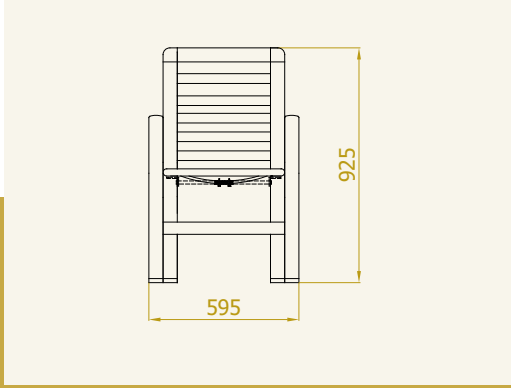

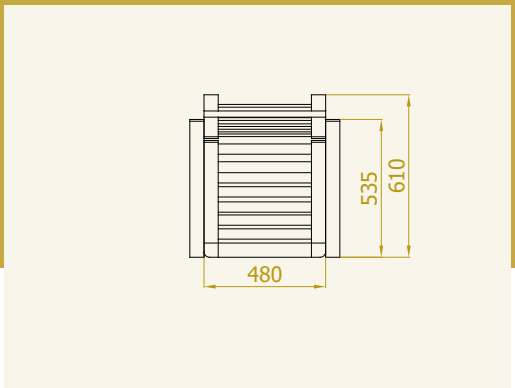

The terrace dining chair ORBITA is designed in a minimalistic style.
Thanks to the special RF mechanism, this terrace chair is extremely endurable. You can lean on it or sit in it with your full weight without the danger of breaking the chair.

Orbita

STOOL - 035 AL

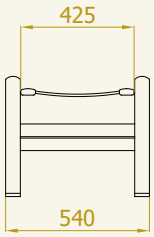

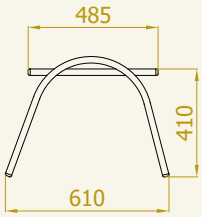

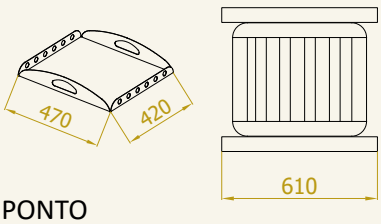

PONTO
Model 180 AL

The tabouret ORBITA can be upgraded with **the service plate PONTO** and used like small table beside the lounger or used as an extra seat.
Also can be used as a tabouret beside the chair.

Orbita

BENCH - 110, 150 AL

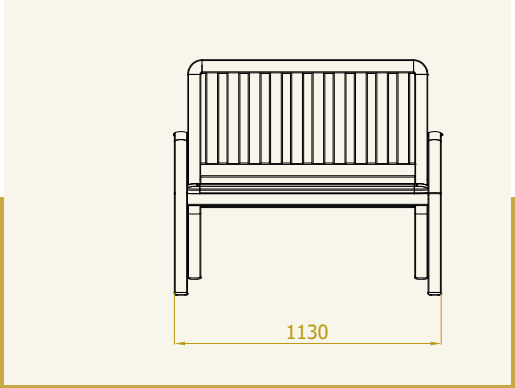

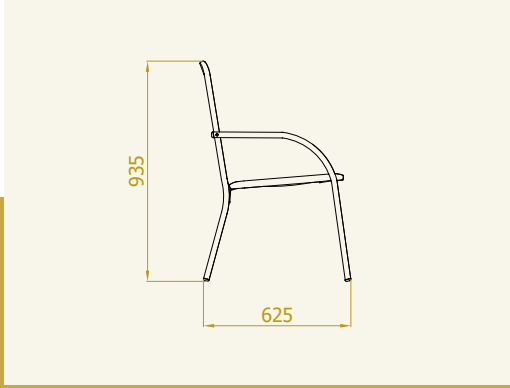

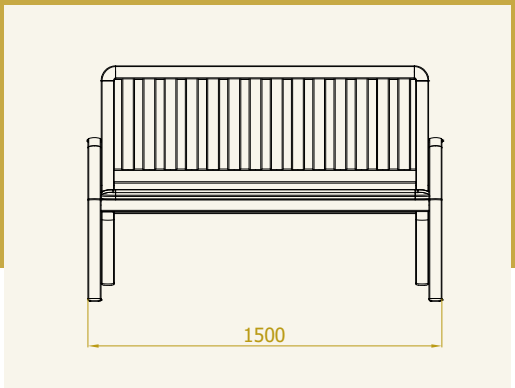

The bench ORBITA is designed in a minimalistic style.
The bench is developed in two dimensions:

- 150 cm
- 110 cm

The construction is fixed.

Aurora

BENCH - 110, 150 AT

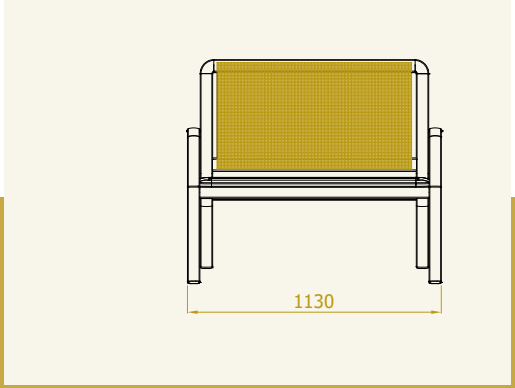

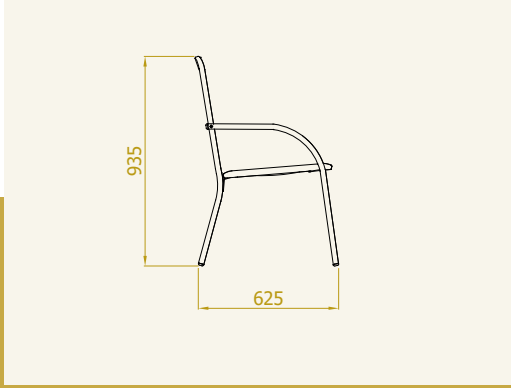

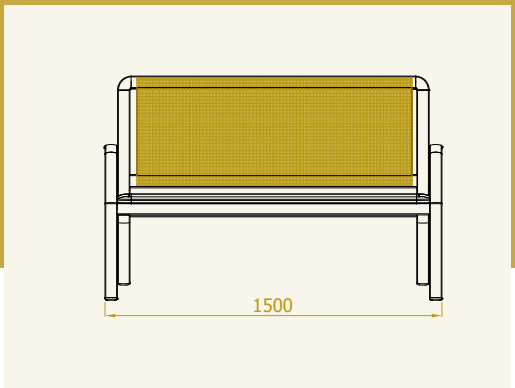

The bench AURORA is designed in a minimalistic style.
The bench is developed in two standard dimensions with fixed construction:

- 3-seat bench l=150 cm or 2-seat bench l= 110 cm

Special version is the AURORA bench l=200 cm with storage space under the seat.